Article **Journal of Technological Prototypes**
December 2019 Vol.5 No.16 1-5

Prototype automation for electrolytic coating

Automatización de prototipo para recubrimiento electrolítico

GARCIA-RASCÓN, Araly†*, FRIAS-GUTIERREZ, Edgar José and MUÑOZ-LOPEZ, Luis Enrique

Universidad Tecnológica de Chihuahua

ID 1st Author: *Araly, Garcia-Rascón* / **ORC ID:** 0000-0002-7027-7035, **Researcher ID Thomson:** X-9783-2019, **CVU CONACYT ID:** 370701

ID 1st Coauthor: *Edgar José, Frias-Gutierrez* / **ORC ID:** 0000-0003-0283-3228, **Researcher ID Thomson:** X-9785-2019, **CVU CONACYT ID:** 878512

ID 2nd Coauthor: *Luis Enrique, Muñoz-Lopez* / **ORC ID:** 0000-0003-3184-7602, **Researcher ID Thomson:** X-9772-2018, **CVU CONACYT ID:** 456614

DOI: 10.35429/JTP.2019.16.5.1.5 Received July 12, 2019; Accepted October 15, 2019

Abstract

Corrosion of materials is nowadays one of the problems in the industry. The aim of this article is to integrate an automated prototype electrolytic coating system and implement it in a furniture plant based at Chihuahua, Mexico. It is based on the study and development of the automation process of a manual coating machine with a Chrome bath, in order to reduce production costs, increase quality, and minimize the negative impacts in the workers' safety. The prototype consists of a bank of PVC tubes and a power source; while automation is done through PLCs.

Electrodeposition, Automation, Programming

Resumen

Hoy en día uno de los problemas en la industria, es la corrosión que sufren los materiales. El objetivo del presente artículo es la integración de un sistema prototipo automatizado de recubrimiento electrolítico, para su posterior implementación en la empresa de cromos y muebles de Chihuahua Se basa en el estudio y desarrollo del proceso de automatización de una maquina manual de recubrimiento con baño de cromo con el fin de satisfacer la necesidad de reducir costos de producción y minimizar los impactos negativos de los trabajadores en materia de seguridad laboral. El prototipo consiste en un banco de tinas de PVC, una fuente de poder y la automatización se realiza a través de PLC´s.

Electrodeposición, Automatización, Programación

Citation: GARCIA-RASCÓN, Araly, FRIAS-GUTIERREZ, Edgar José and MUÑOZ-LOPEZ, Luis Enrique. Prototype automation for electrolytic coating. Journal of Technological Prototypes. 2019. 5-16: 1-5

* Correspondence to Author (email: agarcia@utch.edu.mx)
† Researcher contributing first author

Introduction

Cromos y Muebles de Chihuahua is a company engaged in the electrolytic coating of metal parts and furniture. Currently, the chrome plating process is manually operated, making difficult to control the immersion time, so there is a need to automate the process in order to reduce operating costs, in addition to reducing human error factors and increasing labor safety for workers.

The electrodeposition process is one of the most used techniques in the coating of metals; nowadays, one of the problems in the industry is metal corrosion. Electrodeposition has been widely used in different applications due to good thicknesses achieved in acid electrolytes.

The electrodeposition of metals used in the technological field (circuits, connectors, contactors and electronics in general), is of great importance.

En el mundo actual, esta técnica tiene la capacidad de cambiar las propiedades químicas, físicas o mecánicas de la superficie de las piezas, mejora la resistencia a la abrasión, proporciona propiedades anticorrosivas, mejora su necesidad de lubricación, entre otros beneficios.

The industrial process of electrodeposition in metal parts consists primarily of applying a copper layer, followed by a nickel layer. The copper layer is responsible for offering a surface that facilitates the electrodeposition of nickel, which has a great resistance against corrosion; finally, the chrome layer provides a decorative finish of high hardness and excellent protection against corrosion.

For the Technological Universities of the country, two of its greatest advantages are its academics and its laboratory and workshop infrastructure, since the TU's modality performs at least 70% of the students' activities in a practical way. This type of research allows teachers to update their knowledge and pass it on to students.

I. Methodology

Firstly, the methodology consists in the investigation design, followed by the construction of the different bathrooms and their automation. The following figure shows the stages of the research methodology:

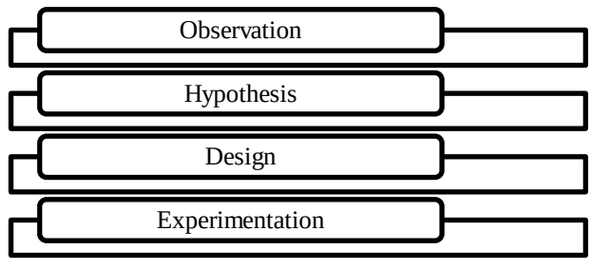

Figure 1 Methodology
Source: Prepared by the authors

1. Investigate, analyze and select the appropriate instrumentation and computation equipment for the operation, measurement, processing and control of the electrodeposition system.

2. Investigate, analyze and select the equipment, tools and chemical substances required for the electrodeposition process.

3. Construction of the electrodeposition process setup.

4. Installation and connection of the equipment.

5. Design and integration of the equipment to a graphical user interface (GUI).

6. Design, development and testing of chemical reagents for electrodeposition.

7. Observation, analysis and data collection.

8. Development of user manual for basic electrodeposition in materials.

II. Electrolysis process

The electrolytic process consists in passing an electric current through an electrolyte, between two conductive electrodes called anode and cathode, where changes occur in the electrodes.

When we connect the electrodes with a power source (direct current generator), the electrode which joins to the positive pole of the generator is the anode and the electrode which joins to the negative pole of the generator is the cathode. An electrolysis reaction can be considered as the set of two half reactions, an anodic oxidation and a cathodic reduction (Figure 2).

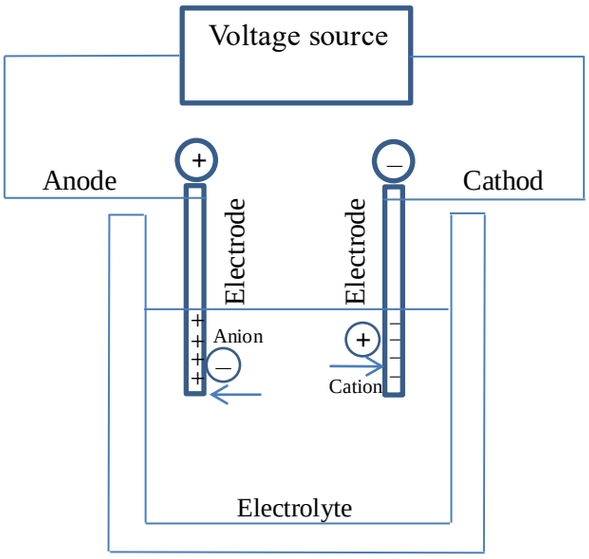

Figure 2 Elements involved in an electrolytic process

III. Faraday's Law

Faraday's law constitutes the fundamental principle of electrolysis. With the equation of this law, we can calculate the amount of metal that has been corroded or deposited uniformly over another for a certain time, by an electrochemical process, and it is expressed in the following statement:

"The amount of any element (radical or group of elements) released either at the cathode or at the anode during electrolysis is proportional to the amount of electricity that passes through the solution."

$$= \frac{I.T.M}{n.\ F} \qquad (1)$$

Where:

W = amount of metal which has been corroded or deposited [g]
I = current [A]
T = time of the process [s]
M = atomic mass of metal [g/mol]
n = metal valence
F = Faraday's constant = 96500 [$A.s/mol$]

IV. Stages for metal coating

The steps comprising the realization of a metallic coating are the following:

1. Pre-degreasing
2. Rinse
3. Electrolytic degreasing
4. Rinse
5. Activation
6. Rinse
7. Nickel plated
8. Rinse
9. Chrome
10. Rinse

Pre-degreasing.- In the pre-degreasing stage, an alkaline cleaning solution is used, useful to remove dirt, grease and oils from the pieces.

Rinse.- For all rinses the tubs have water, where the pieces are submerged for 1 to 2 minutes to remove waste from the used solutions.

Electrolytic degreasing.- It is an alkaline electrolytic degreaser which eliminates impurities and activates the adhesion of the material.

Activation.- In this tub, the pieces are submerged for one minute to neutralize the alkaline surface and activate it.

Nickel plating.- In this stage, the piece is immersed in nickel at a temperature of 50°C and the current calculated for the desired thickness is applied based on the area of the piece.

Chromed.- Finally, it is immersed in the chrome tub at a temperature of 50°C and the calculated current is applied based on the area of the piece and left for a period of 30 seconds.

This is the general sequence applied to a metal piece to achieve a decorative chrome metallic coating. It is very important that the metal piece to be coated reaches a perfectly polished coating process, without scratches and irregularities in its surface.

V. Process automation

Automation is the application of automatic control of industrial processes.

It arises from the need to minimize human intervention in direct production processes, save labor effort and minimize labor risks.

Automation is the convergence of three technologies: mechanical, electronic and computer science, which have gradually formed an interrelation in the specific universe of mechatronics.

Automation-related industries are basically the manufacturing industry and the process industry, which are the ones making great efforts to optimize their processes in order to improve quality, while others focus on cost reductions.

Control equipment

The Programmable Logic Controller (PLC) was created as a solution to the control of complex automation circuits.

Therefore, it can be said that a PLC is nothing more than an electronic device which replaces the auxiliary or control circuits of automatic systems. The sensors and actuators are connected to it.

The communication interface is responsible for the transfer of information between man-machine, machine and other elements through ports and buses, thus constituting some type of network. For the development of this prototype, we used PLCs type siemens.

Results

The construction of the equipment consists of electrolytic tubs or baths, constructed of fiberglass with a plastic coating and an epoxy white paint finish to prevent corrosion caused by the chemicals used for the metal coating. The bank consists of 2 sections, A and B, of 5 tubs each, with a volume of 20 liters each tub.

Figure 3 Tub Bank Section A
Source: Prepared by the authors

The tubs are marked, have a thermometer, water tap, drain, electrical outlet of 127 VAC, 60 HZ and 4 A, cathode and anodic bars, in addition to having a bar to place the pieces to be coated and a metal folder to place documents or practices to perform.

Figure 4 Tub 5 section A
Source: Prepared by the authors

The electrodeposition prototype has a cabinet with a DC voltage source with a capacity of 100 Amps, with a data acquisition card, Labview 2018 software.

Inside the control cabin there are 3 selectors to power the tubs 1, 3 and 5 of section A; only these tubs have electrodes to perform the electrodeposition process on the piece to be covered with the desired metal.

Figure 5 Cabinet with power source
Source: Prepared by the authors

Conclusions

The development and linking of projects with the productive sector is of great importance for the Technological University of Chihuahua to contribute to the efficiency of productive processes. The electrodeposition of parts and components can be used to prevent corrosion in metal pieces and give them a decorative finish, contributing to the manufacture of higher quality products.

Applying the knowledge developed in educational institutions to improve production processes within the local industry.

The industry acknowledges the importance and value of linking the educational sector for improving their processes through collaboration, using similar environments to those of the company, thus, placing the students in real-life situations.

References

Artavia Vega, N. (2008). Diseño, construcción y puesta en marcha de un equipo de electrodeposición de cromo. *Tesis*. San Jose, Costa Rica.

Barajas, F., & Mujica, J. (2007). *Desarrollo de un proceso de anodizado electrolítico con electrodeposición de níquel.* Redalyc. Retrieved from Redalyc: www.redalyc.com

CRODE. (2004). Manual de operacion del equipo de recubrimientos metálicos. *Manual de operacion del equipo de recubrimientos metálicos*. Chihuahua, Chih.

Field, S., & Dudley Weill, A. (1995). *Recubrimientos Electrolíticos.* Barcelona, Spain: Gustavo Gili.

Imaz Molina, N. (2013). *Aplicacion de tecnicas de electrodeposicion mediante pulsos de corriente para la obtencion de recubrimientos metalicos.* Barcelona, Spain: Thesis.

Mahmud, Z., & Mingolo, N. (2010). Efecto de la textura de electrodepositos de zinc en acero sobre su resistencia a la corrosion. *Redalyc*, 1-3.

Steven Espinel, & Roman. (2016). *Automatización de una máquina de recubrimiento electrolítico*. Retrieved in 2016.